RoHS compliant

REVISION DATA				
SYM	ECN	DESCRIPTION	DATE	APPROVED

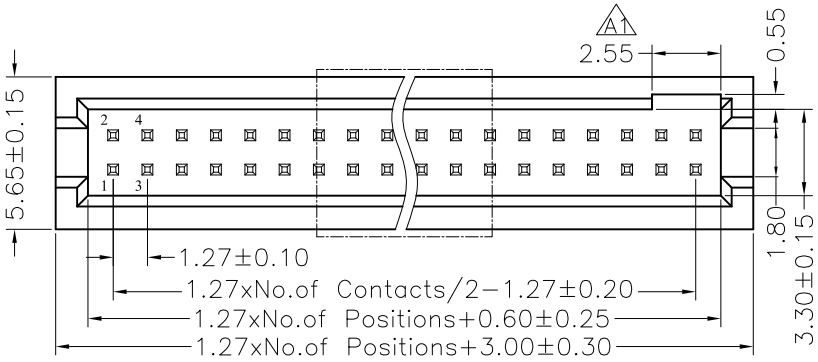

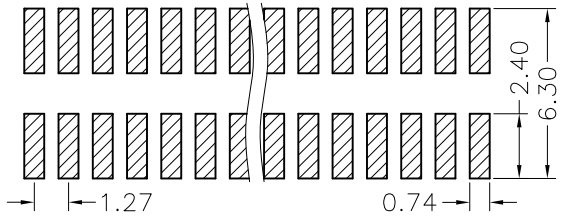

Recommended P.C.B Layout(Top Side)
(PCB BOARD TOLERANCE±0.05)

NOTES:
Current Rating:1AMP
Contact Resistance:20mΩ max
Withstand Voltage:500V AC/DC
Insulation Resistance:1000MΩ min
Operation Temperature:−40℃ to +105℃

Contact Material:Brass
Contact plating:Au or Sn Over Ni
Insulator Material:PA6T+30%GF(UL94V−0)

HOW TO ORDER

BC - XX M XX - X - X

Total Pins
10 34
14 40
16 44
20 50
24 60
26 64
30 80
32 100

Plating Code

Insulator Color:
K:Black
U:Blue
W:White

Package Type:
A:Tray
B:Tube
C:W/Cap in Tube
D:W/o Cap in Tape & Reel
E:W/Film in Tube
F:W/Film in Tape & Reel
R:With Cap in Tape & Reel

Full Gold Type	Selective Plated Type Gold Plated on Contact Area Tin Plated on Solder Area	Full Tin Type
00 : Gold Flash	S0: Gold Flash, Tin 100u"	T1 : Tin 100u"
01 : Gold 3u"	S1 : Gold 3u", Tin 100u"	T2 : Tin 200u"
02 : Gold 5u"	S2 : Gold 5u", Tin 100u"	T3 : Tin 150u"
03 : Gold 10u"	S3 : Gold 10u", Tin 100u"	MT: Matte Tin
04 : Gold 15u"	S4 : Gold 15u", Tin 100u"	
05 : Gold 20u"	S5 : Gold 20u", Tin 100u"	
06 : Gold 30u"	S6 : Gold 30u", Tin 100u"	

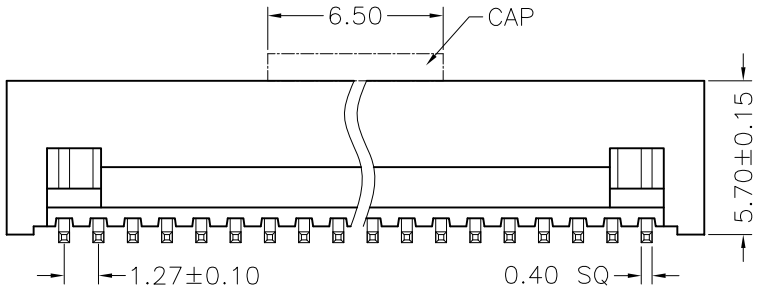

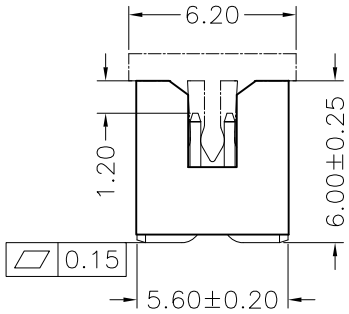

ElectronAix

TOLERANCE:		PROJECTON		TITLE: 1.27mm Box Header SMT Type H=5.7		
ANGLE	±3°	DATE	08-05-08'			
X.XXX	±0.15	DRAWN	JXL	PART NO: BC-XXMXX-X-X		
X.XX	±0.25	CHECKED				
X.X	±0.40	APPROVED		REV: A	UNIT: mm	SCALE: 2:1	SIZE: A4
X.	±0.50					